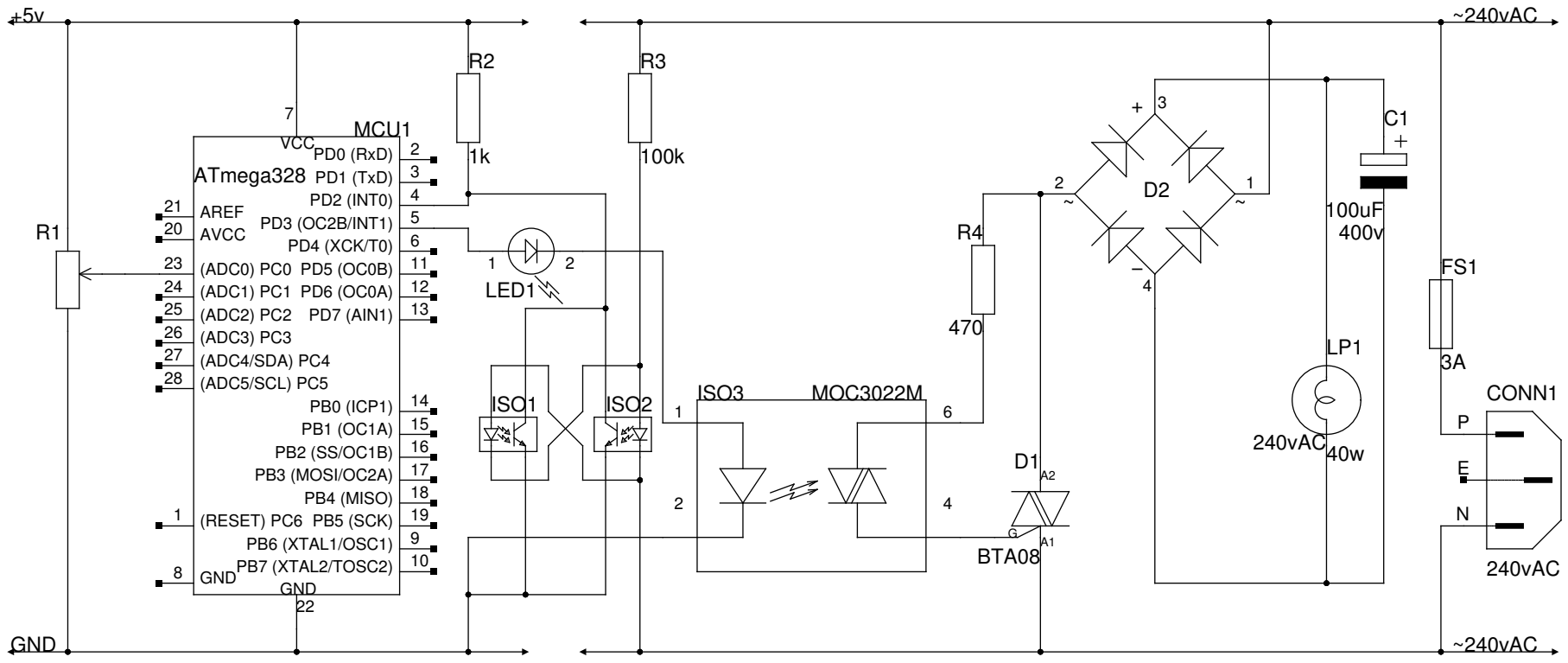

TITLE: Switch mode Arduino PSU (DC smoothed) AUTHOR: Graham North CREATED: 13–June–2017 NOTES: