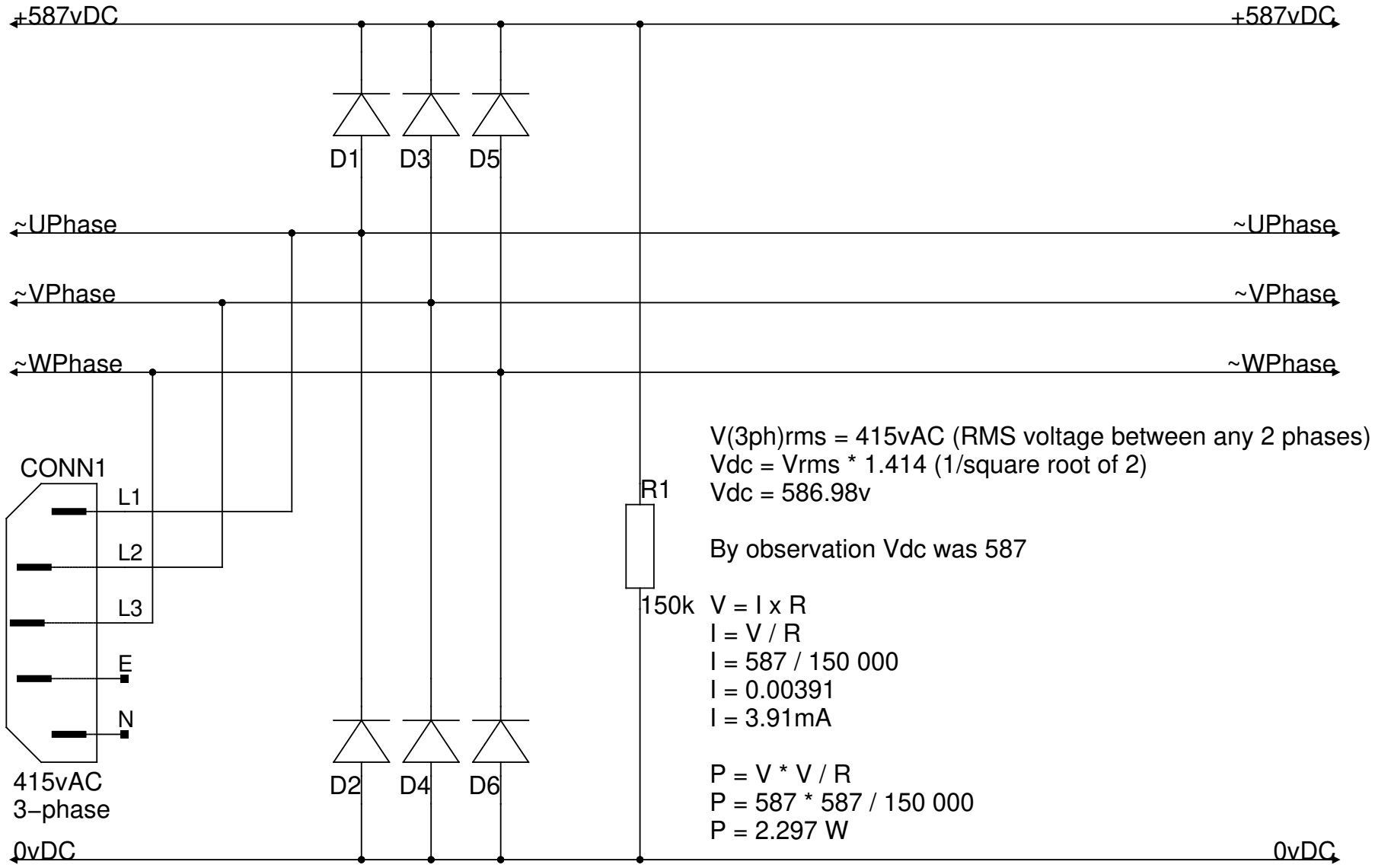

V(3ph)rms = 415vAC (RMS voltage between any 2 phases)
Vdc = Vrms * 1.414 (1/square root of 2)
Vdc = 586.98v

By observation Vdc was 587

V = I x R
I = V / R
I = 587 / 150 000
I = 0.00391
I = 3.91mA

P = V * V / R
P = 587 * 587 / 150 000
P = 2.297 W

TITLE: 3−phase to DC experiments AUTHOR: Graham North CREATED: 23−Febuary−2019 NOTES: