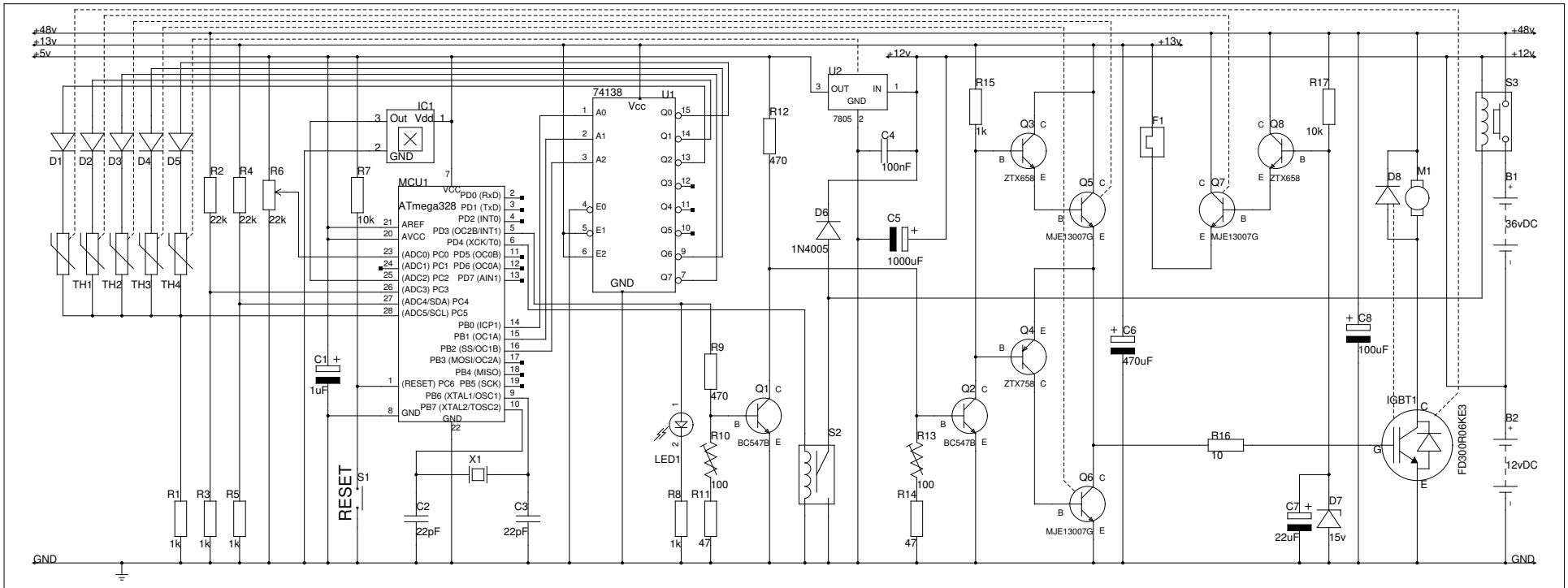

TITLE: Controller (Thermal Sense Multiplexed) AUTHOR: Graham North CREATED: 17–April–2017 NOTES: